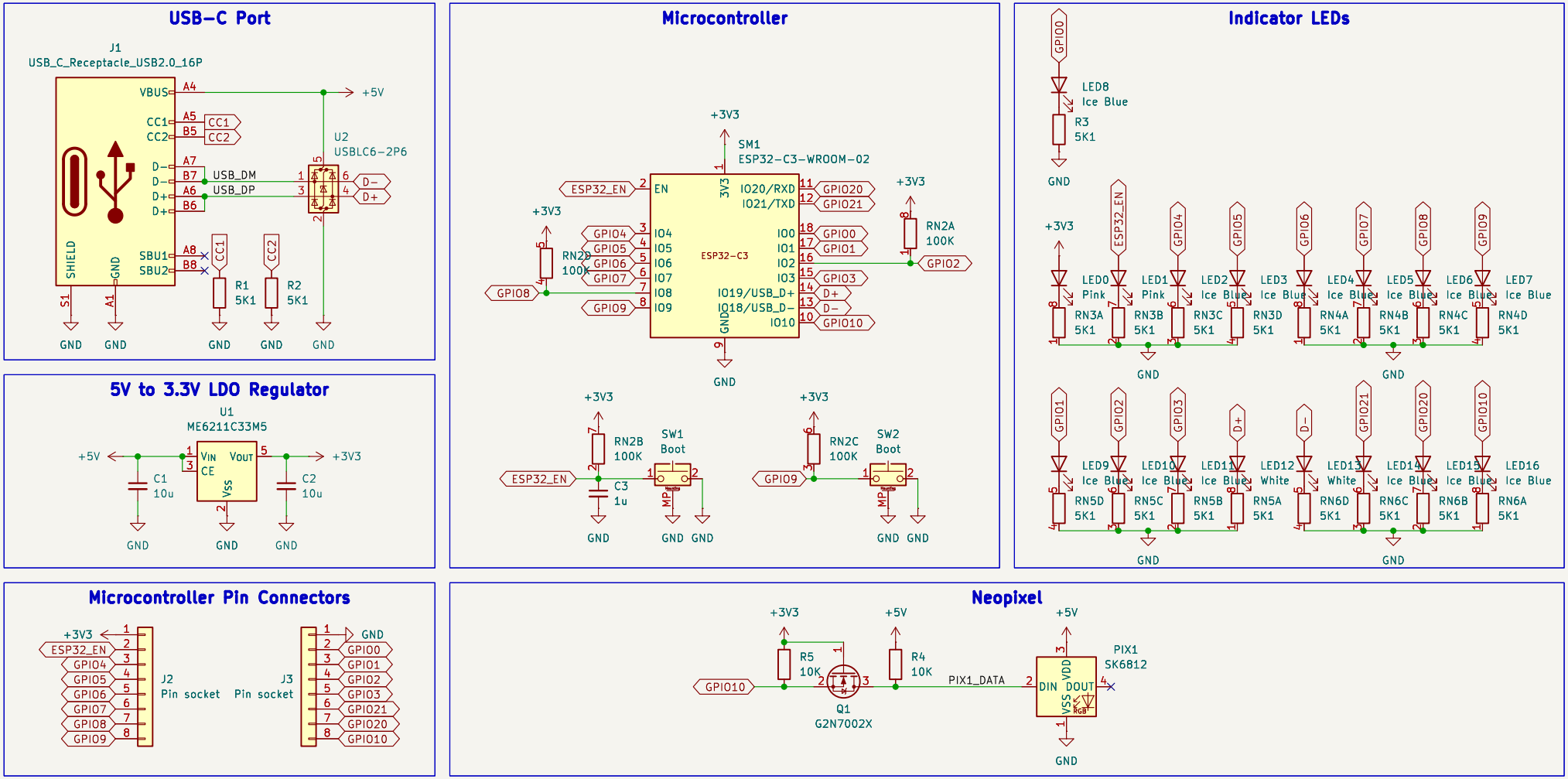

open source hardware
CERN-OHL-P v2

Sheet: /
File: flexypin-esp32c3-wroom-jig.kicad_sch

Title: ESP32-C3-WROOM-02 FlexyPin Adapter

Size: A4	Date: 2025-03-18	Rev: v1
KiCad E.D.A. 9.0.1		Id: 1/1